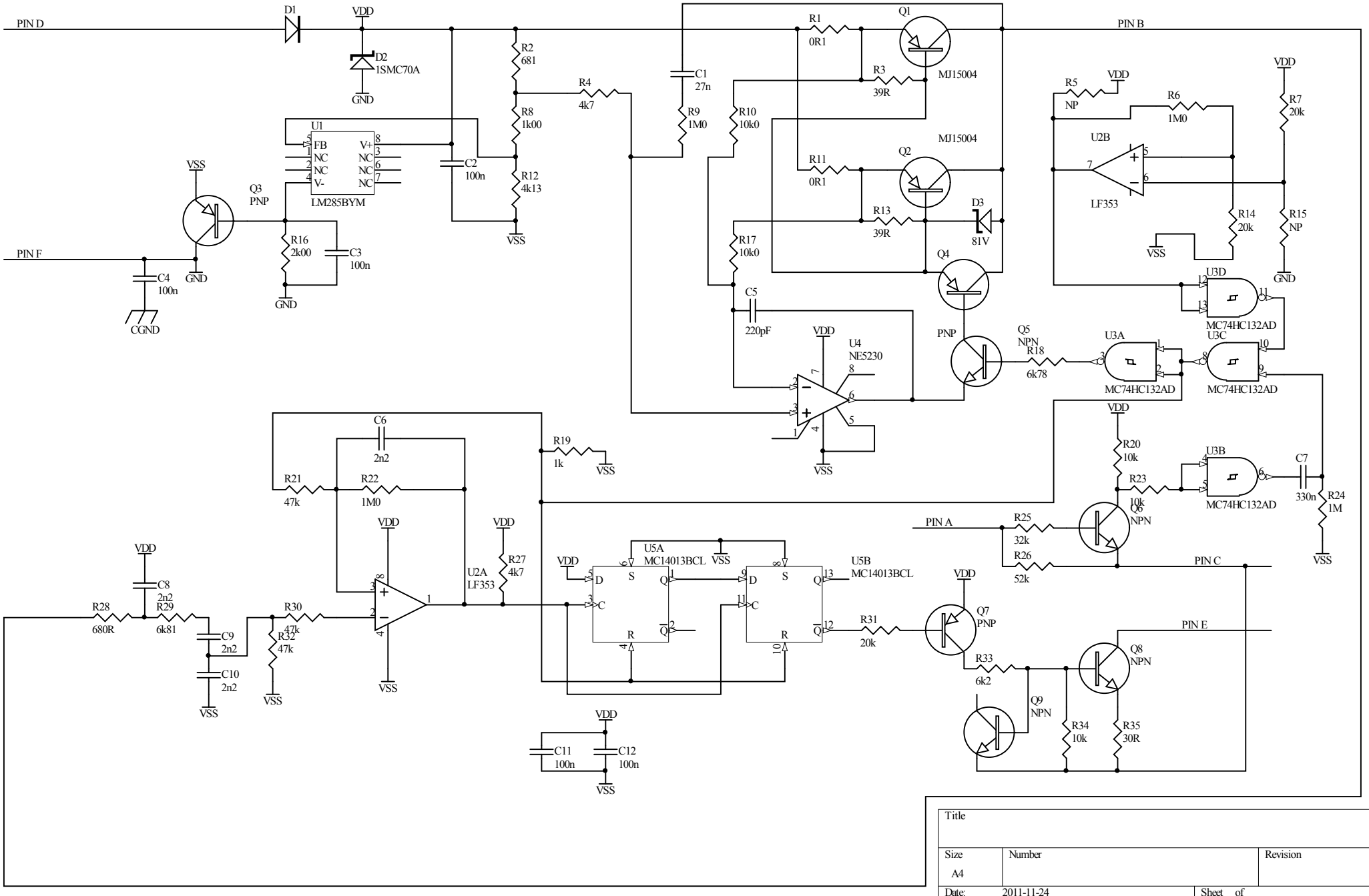

Title		
Size A4	Number	Revision
Date: 2011-11-24		Sheet of
File: C:\Documents and Settings\...\PumpDriver.SchDoc		Drawn By: